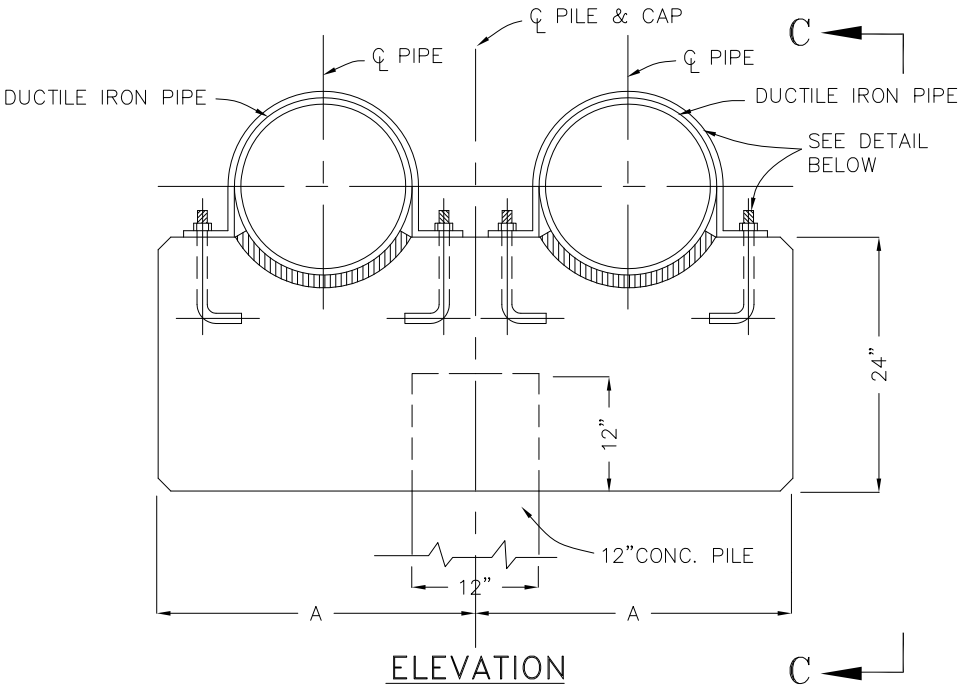

NOTE:
1. ALL HARDWARE SHALL BE STAINLESS STEEL.
2. SEE FOLLOWING SHEETS FOR ADDITIONAL DIMENSIONS.

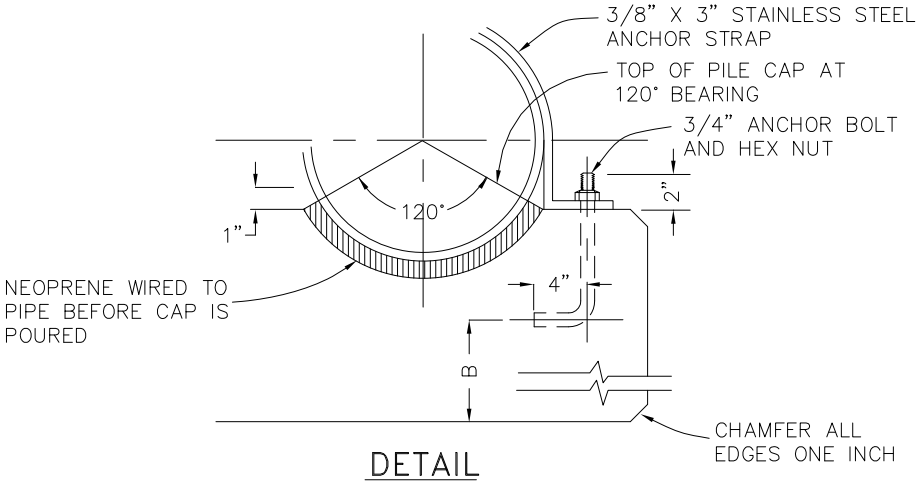

PIPE CAP SUPPORT DETAIL
DUAL PIPE (ELEVATION)

DSGN.	SOUTH MARTIN REGIONAL UTILITY (SMRU)	DATE APPROVED AUGUST 2016
DRW. MES		DRAWING NUMBER
CK. ML	CONSTRUCTION STANDARDS AND DETAILS	G 16